Technological University of the Philippines Visayas
COLLEGE OF ENGINEERING
Talisay City, Negros Occidental

2-Bit ALU Verilog Gate-Level Modeling with CPLD

A Project presented to the

Computer Engineering Department

of Technological University of the Philippines Visayas

In Partial Fulfillment

of the Requirements for the Subject

Computer Programming 6

Tappa, Nestor Luis Jr. M.

SCHEMATIC DIAGRAM

External Circuit

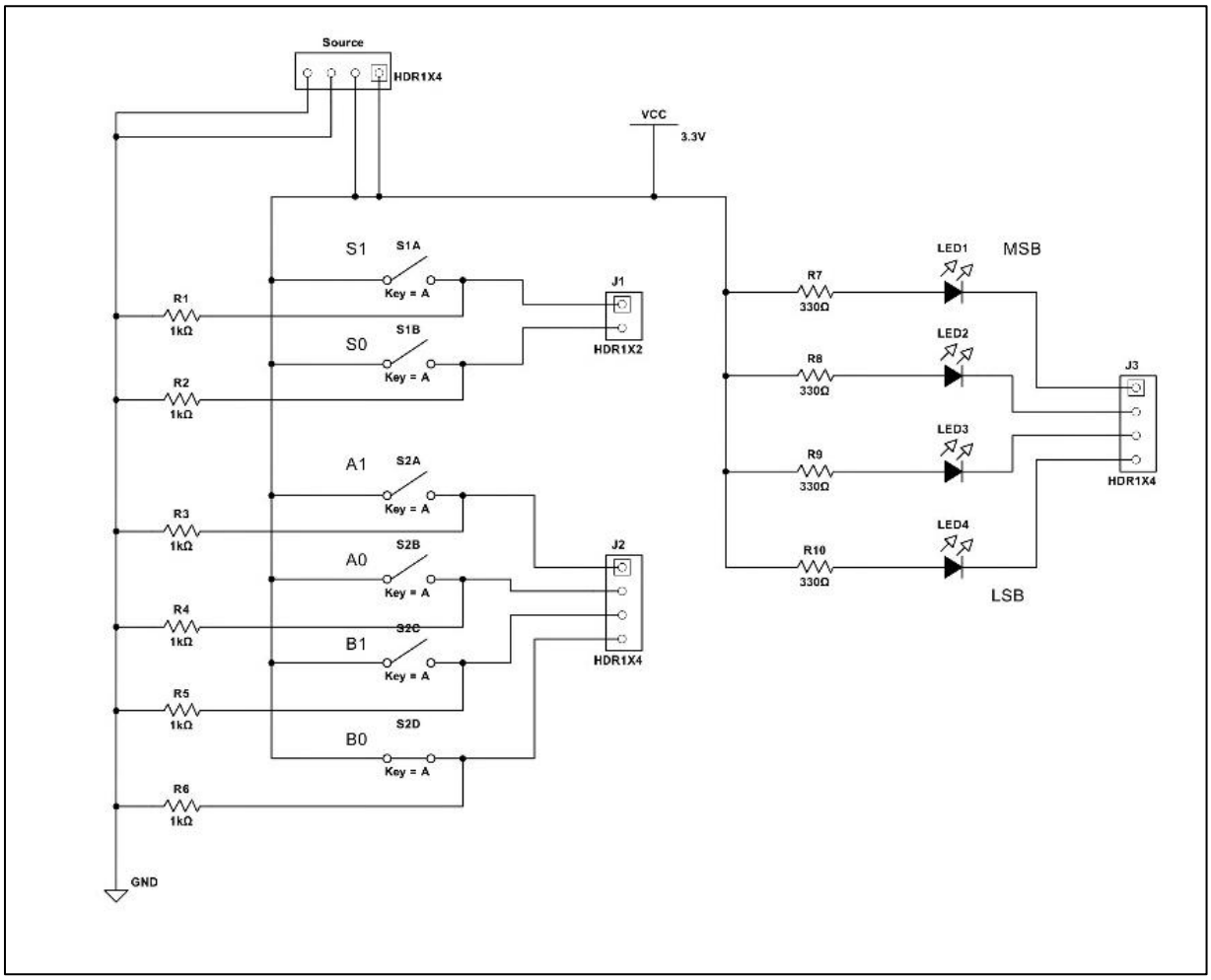

PPG AND PCB

External Circuit

PPG

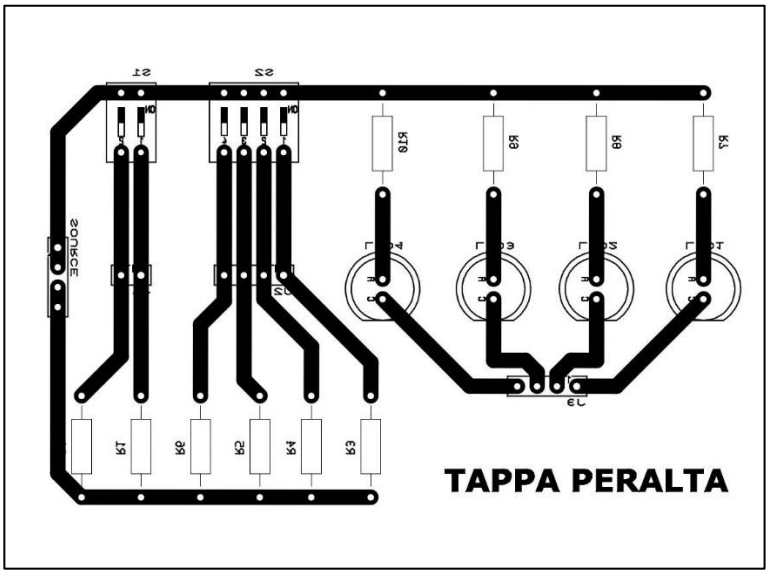

PCB

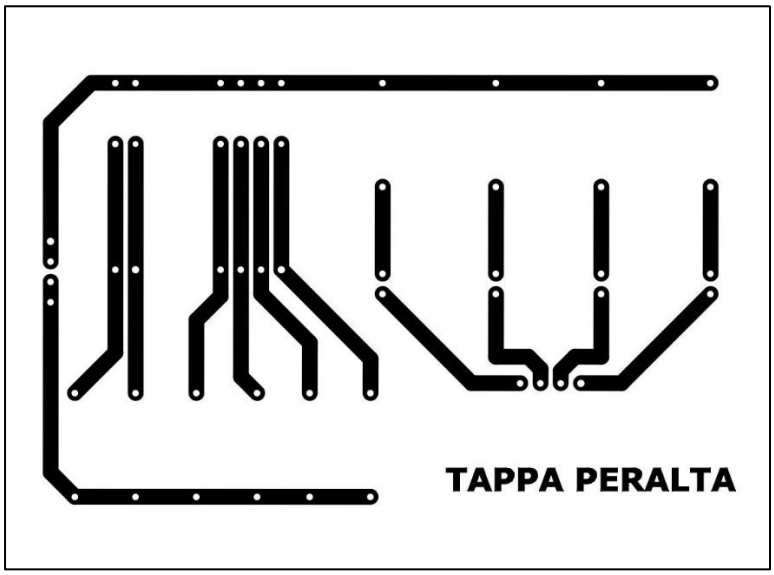

QUARTUS

Verilog Code

```
module ALU(S,A,B,F);

   input[1:0]  S,A,B;
   output[3:0]    F;

   //Enabler Wires
   wire[1:0]   Snot;
   wire     en01,en10,en11;
   //Demux Wires
   wire[1:0]   add_A, add_B;
   wire[1:0]   sub_A, sub_B;
   wire[1:0]   mul_A, mul_B;
   //Adder Wires
   wire[2:0]   Sum;
   wire[3:0]   aw;
   //Subtractor Wires
   wire[2:0]   Diff;
   wire[3:0]   sw;
   //Multiplier Wires
   wire[3:0]   Prod;
   wire[3:0]   mw;
   //OR Output Wires
   wire[2:0]   orF;

   //Enabler Gates
   not   E1(Snot[1],S[1]), E2(Snot[0],S[0]);
   and   E3(en01,S[0],Snot[1]), E4(en10,S[1],Snot[0]), E5(en11,S[1],S[0]);
   //Demux 01 Gates (Adder)
   and   DM1(add_A[1],en01,A[1]), DM2(add_A[0],en01,A[0]), DM3(add_B[1],en01,B[1]), DM4(add_B[0],en01,B[0]);
   //Demux 10 Gates (Subtractor)
   and   DM5(sub_A[1],en10,A[1]), DM6(sub_A[0],en10,A[0]), DM7(sub_B[1],en10,B[1]), DM8(sub_B[0],en10,B[0]);
   //Demux 11 Gates (Multiplier)
   and   DM9(mul_A[1],en11,A[1]), DM10(mul_A[0],en11,A[0]), DM11(mul_B[1],en11,B[1]), DM12(mul_B[0],en11,B[0]);
   //Adder Circuit
   xor   A1(Sum[0],add_A[0],add_B[0]), A3(aw[1],add_A[1],add_B[1]), A4(Sum[1],aw[1],aw[0]);
   and   A2(aw[0],add_A[0],add_B[0]), A5(aw[2],add_A[1],add_B[1]), A6(aw[3],aw[1],aw[0]);
   or A7(Sum[2],aw[2],aw[3]);
   //Subtractor Circuit
   xor   D1(Diff[0],sub_A[0],sub_B[0]), D3(sw[1],sub_A[1],sub_B[1]), D4(Diff[1],sw[1],sw[0]);
   and   D2(sw[0],~sub_A[0],sub_B[0]), D5(sw[2],~sub_A[1],sub_B[1]), D6(sw[3],sw[0],~sw[1]);
   or D7(Diff[2],sw[2],sw[3]);
   //Multiplier Circuit
   and   M1(Prod[0],mul_A[0],mul_B[0]), M2(mw[0],mul_A[1],mul_B[0]), M3(mw[1],mul_B[1],mul_A[0]), M4(mw[2],mul_B[1],mul_A[1]), M6(mw[3],mw[0],mw[1]), M8(Prod[3],mw[2],mw[3]);
   xor   M5(Prod[1],mw[0],mw[1]), M7(Prod[2],mw[2],mw[3]);
   //OR Output
   or    O1(orF[0],Sum[0],Diff[0],Prod[0]), O2(orF[1],Sum[1],Diff[1],Prod[1]), O3(orF[2],Sum[2],Diff[2],Prod[2]);
   //Inverter Output (Active-Low)
   not   N1(F[0],orF[0]), N2(F[1],orF[1]), N3(F[2],orF[2]), N4(F[3],Prod[3]);

endmodule
```

Pin Planner

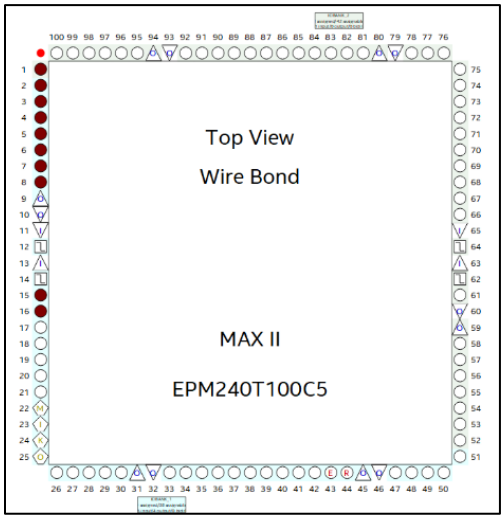

Node Name	Direction	Location	I/O Bank	Fitter Locatior	I/O Standard	Reserved	urrent Strengt	ict Preservati
A[1]	Input	PIN_1	2	PIN_1	3.3-V LVTTL		16mA ...ault)	
A[0]	Input	PIN_2	1	PIN_2	3.3-V LVTTL		16mA ...ault)	
B[1]	Input	PIN_3	1	PIN_3	3.3-V LVTTL		16mA ...ault)	
B[0]	Input	PIN_4	1	PIN_4	3.3-V LVTTL		16mA ...ault)	
F[3]	Output	PIN_5	1	PIN_5	3.3-V LVTTL		16mA ...ault)	
F[2]	Output	PIN_6	1	PIN_6	3.3-V LVTTL		16mA ...ault)	
F[1]	Output	PIN_7	1	PIN_7	3.3-V LVTTL		16mA ...ault)	
F[0]	Output	PIN_8	1	PIN_8	3.3-V LVTTL		16mA ...ault)	
S[1]	Input	PIN_15	1	PIN_15	3.3-V LVTTL		16mA ...ault)	
S[0]	Input	PIN_16	1	PIN_16	3.3-V LVTTL		16mA ...ault)	
<<new node>>								

Compilation Report

Flow Summary

<<Filter>>

Flow Status	Successful - Tue Oct 15 13:28:38 2024
Quartus Prime Version	20.1.0 Build 711 06/05/2020 SJ Lite Edition
Revision Name	ALU
Top-level Entity Name	ALU
Family	MAX II
Device	EPM240T100C5
Timing Models	Final
Total logic elements	14 / 240 (6 %)
Total pins	10 / 80 (13 %)
Total virtual pins	0
UFM blocks	0 / 1 (0 %)